Quick Set Dovetail Jig

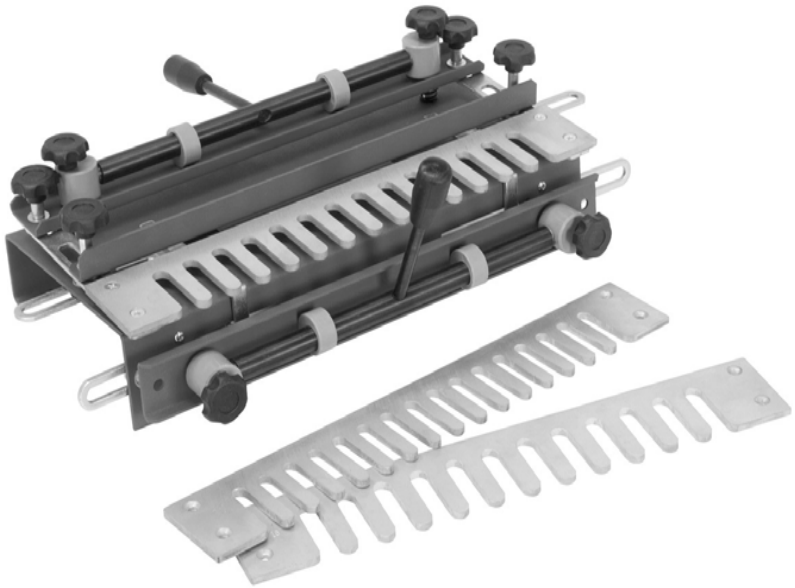

FOR HELP OR ADVISE ON THIS PRODUCT PLEASE CALL OUR CUSTOMER SERVICE HELP LINE : 01509 500359

THE MANUFACTURER RESERVES THE RIGHT TO ALTER THE DESIGN OR SPECIFICATION TO THIS PRODUCT WITHOUT NOTICE. PICTURES AND DIAGRAMS ARE FOR ILLUSTRATION PURPOSES ONLY

0307/01358

Please read and fully understand the instructions in this manual before operation. Keep this manual safe for future reference

SAFETY INSTRUCTIONS

WARNING! When using electric tools basic safety precaution should always be followed to reduce the risk of fire, electric shock and personal injury.

Read all these instructions before attempting to operate this product and save these instructions for future reference.

1. **Keep work area clear**. Cluttered areas and benches invite injuries.
2. **Consider work area environment.** Do not expose tools to rain. Do not use tools in damp or wet locations. Keep work area well lit. Do not use tools in the presence of flammable liquids or gases.
3. **Guard against electric shock**. Avoid body contact with earthed or grounded surfaces.
4. **Keep other people away**. Do not let others, especially children, not involved in the work touch the tool or the extension lead and keep them away from the work area.
5. **Store idle tools.** When not in use, tools should be stored in a dry locked-up place, out of reach of children.
6. **Do not force the tool.** It will do the job better and safer at the rate for which it was intended.
7. **Use the right tool.** Do not force small tools to do the job of a heavy duty tool. Do not use tools for purpose not intended: for example: do not use portable metal cutting to cut tree limbs or logs.
8. **Dress properly**. Do not wear loose clothing or jewellery they can be caught in moving parts. Non-skid footwear is recommended when working outdoors. Wear protective hair covering to contain long hair.
9. **Use protective equipment**. Use safety glasses. Use face or dust mask if cutting operations create dust.
10. **Connect dust extraction equipment**. If devices are provided for the connection of dust extraction and collecting equipment, ensure these are connected and properly used.
11. **Do not abuse the cable**. Never pull the power cable to disconnect it from the socket. Keep the cable away from heat, oil and sharp edge.
12. **Secure work**. Where possible use clamps or a vice to hold the work. It's safer than using your hand.
13. **Don't over reach.** Keep proper footing and balance at all time.
14. **Maintain tools with care.** Keep cutting tools sharp and clean for better and safer performance. Follow instructions for lubricating and changing accessories. Inspect power cables periodically and if damaged have them replaced by an authorised service facility. Inspect ex-

NOTES

NOTES

SAFETY INSTRUCTIONS continued...

tension cables periodically and replace if damaged. Keep handles dry, dean and free from oil and grease.

15. **Disconnect tools**. When not in use, before servicing and when changing accessories such as blades, bits, cutters, disconnect tools from the power supply.
16. **Remove adjusting keys and wrenches**. From the habit of checking to see that keys and adjusting wrenches are removed from the tool before turning it on.
17. **Avoid unintentional starting**. Ensure switch is in 'off' position when plugging in.
18. **Use outdoor extension leads**. When the tool is used outdoors, use only extension leads intended for outdoor use and so marked.
19. **Stay alert.** Watch what you are doing, use common sense and do not operate the tool when you are tired.
20. **Check damaged parts**. Before further use of the tools, it should be carefully checked to determine that it will operate properly and perform its intended function. Check the alignment of moving parts, binding of moving parts, breakage of parts, mounting and any other conditions that may affect its operation. A guard or other part that is damaged should be properly repaired or replaced by an authorised service centre unless otherwise indicated in this instruction manual. Do not use the tool if the switch does not turn on and off.
21. **Warning.** The use of any accessory or attachment other than one recommended in this instruction manual may present a risk of personal injury.
22. **Have your tool repaired by a qualified person**. This electric tool complies with the relevant safety rules. Repairs should only be carried out by a qualified person using original spare parts, otherwise this may result in considerable danger to the user.

Safety Rules For Dovetail Cutting Operation.

When using the quick set dovetail jig a router (not supplied) is required, read and understand all instructions supplied with your router, be aware of the dust emitted from the cutting operation. Where possible use dust extraction as described in the manual for your router. Always where protective eye glasses and a dust mask.

TECHNICAL SPECIFICATIONS

MODEL NUMBER	01358
MAXIMUM WORKABLE MATERIAL	300mm*31mm
COMB SIZES	7/16”,1/2”,9/16”
WEIGHT	9Kg
ROUTER CUTTER	01371
	1/4” shank
	11.1mm-7/16” guide bush

GETTING TO KNOW YOUR DOVETAIL JIG

REFER TO PICTURES ON PAGE 5

1 Work table
2 Washer
3 Bolt
4 Nut
5 Side brace
6 Fixing screw “A”
7 Fixing screw “B”
8 Spacing Screw
9 Bar fixing stand

MAINTENANCE

The Quick set dovetail jig requires very little maintenance.
Check the spacing screws are free to move, lubricate if required.
Clean jig down after each cut.
If you are cutting resinous woods these may leave a coating of resin on the jig this should be removed with a mild solvent.

GETTING TO KNOW YOUR DOVETAIL JIG

10	Eccentric wheel
11	Rotary rod
12	Knob
13	Eccentric rod
14	Screw
15	Spring
16	Bracket frame (rear stop)
17	Screw
18	Comb
19	Stop pin
20	Adjusting nut
21	Support
22	Screw
23	Rod Fixer

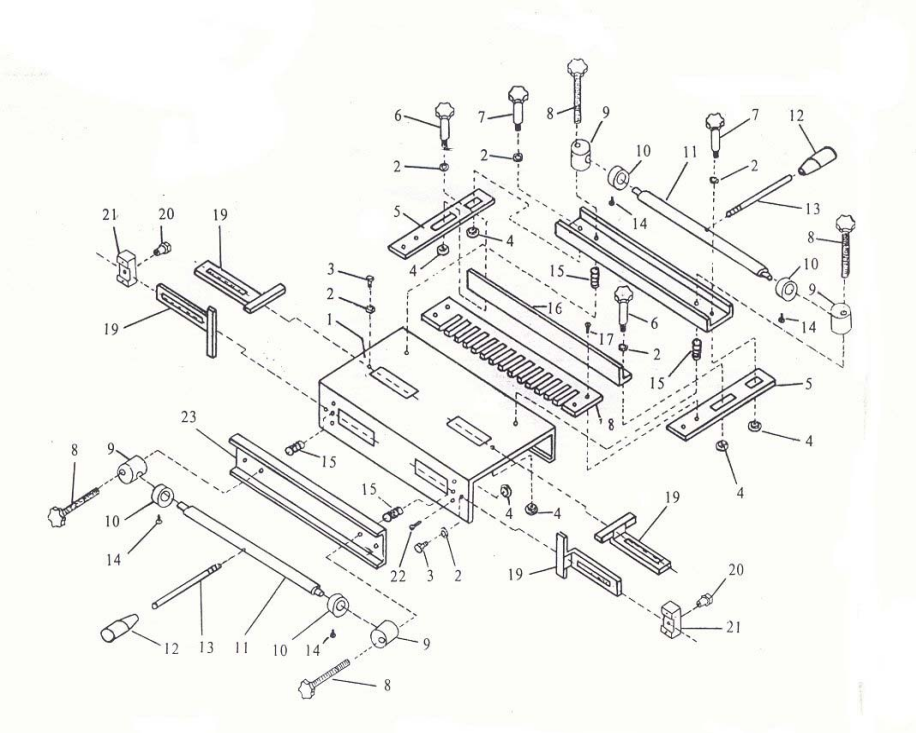

ASSEMBLY

For your convenience the Quick set dovetail jig is supplied with very little final assembly to do.
Fit the required comb ensure all screws (part 17) are tight.

Before commencing further assembly secure the dovetail jig to a work bench using the mounting four holes (two holes in the base and two on the front). Ensure the front of the Dovetail jig overhangs the front of the work bench and the supports (Part no 21) are against the top surface of the work bench.

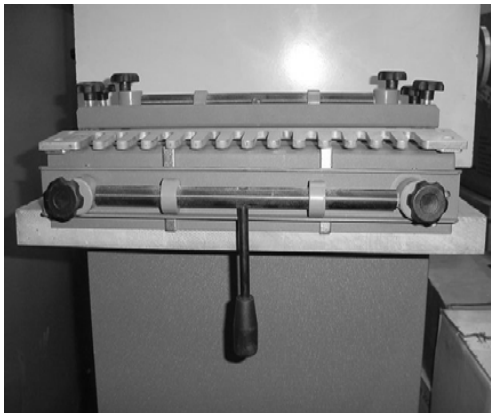

Screw eccentric rods and knobs (part no 12,13) onto the Rotary rod (part no 11).

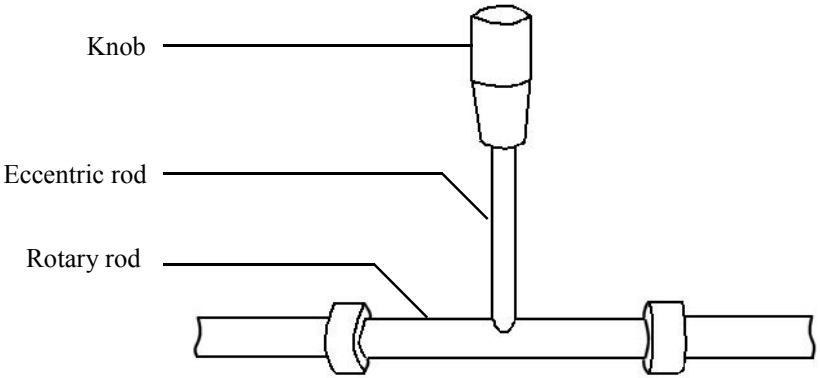

CUTTING THE JOINT

It is recommended that the fist cut is made with trial pieces of wood this allows for checking of setting without damage to the final work pieces

Check all screws are tight, wood is correctly held and will not move.
Place router onto the right hand side of the comb with the cutter clear of the wood, switch on the router and allow to reach full speed , working from left to right guideing the router in and out of the comb, ensure the guide is in contact with the comb at all times, let the cutter cut do not force the router to cut, once finished draw the router out of the work piece, do not lift up or away from the comb switch off the router and allow to cutter to stop rotating.
Only once stopped can the router be removed from the comb.

NOTE never lift the router up at any time as this will cause major damage to the router and dovetail fixture.

Once the cutting operation is finished remove work pieces from the dovetail jig clean off any loose wood with fine sand paper, check the joint fits together correctly , disassemble the joint apply a small amount of wood glue to the fingers and reassemble, hold the joint together with clamps and leave the glue to set.

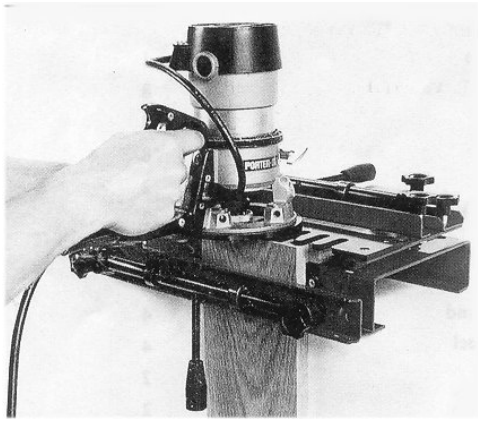

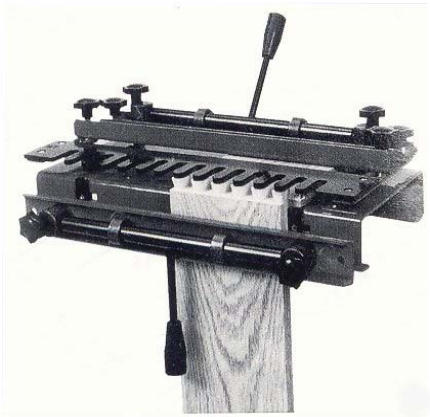

FITTING ROUTER CUTTER

Ensure the bearing guide is correctly fitted to the router cutter and that the bearing collar is tightly held by the grub screw.

Fit the cutter into the router (consult your router manual), using the depth stops adjust the router until the bottom of the cutter protrudes approximately 17mm below the base of the router, this is the cutter depth.

The cutter depth is very important and is the main cause of problems with the fit of the joint, if the cutter is to deep and the joint will be either very tight or will not fit together , if to shallow the joint will be loose.
During final setting use the routers depth stop and make changes of approximately 0.5 mm until correct fit is achieved.

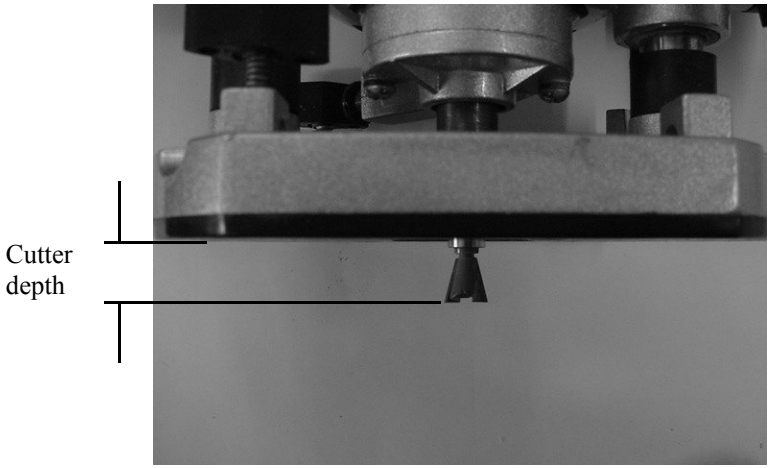

WORK PIECE PREPARATION

The most important operation is the correct preparation of the work pieces before attempting to cut the dovetail joints.
The work pieces must cut to the correct size and have clean square ends, remember to allow for the size and cutting of the dovetail pins .
Always plan the assembly of the final product and mark the work pieces and joints accordingly.

SETTING STOPS

Fit the required comb ensure all screws (part 17) are tight.

Loosen stop clam bolts (Part no 3) slide the stops (Part no 19) out.
Adjust the upper stop so that the face of the stop is in line with the centre of the first finger, with a square check the stop is at 90° to the front face of the jig adjust if nessacery then tighten the clamp bolt(part 3).
Set the front stop to the left of the upper stop by the pitch of the comb (size stamped on the comb).
Repeat operation for left hand stops, but set front stop to the right.

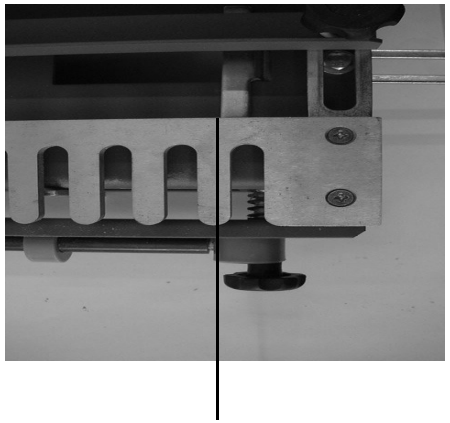

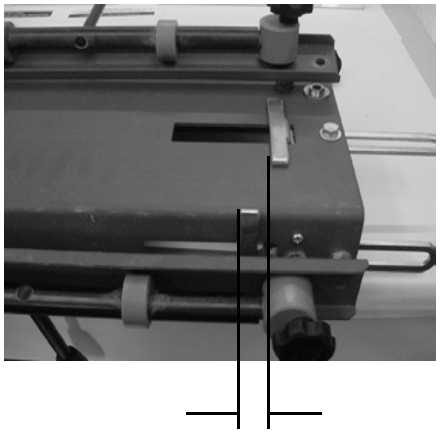

SETTING COMB AND BRACKET FRAME

Loosen fixings screws “A” and ”B” (Part no’s 6 and 7).
Adjust the position of the comb so that it extends the thickness of the wood to be cut minus 2.5mm I.e. the wood extends 2.5mm beyond the end of the fingers on the comb.

To set the bracket frame (Part no 16) move the bracket frame so that its front edge is the correct distance from the front edge of the comb see below for the formula, note this is only a guide adjustments will be required, so please test on scrap wood first.

$$\text{Distance of Bracket frame} = \frac{\text{width of router base}}{2} + 2^* \text{ width of vertical wood} - \frac{\text{Cutter diameter}}{2}$$

Note this is correct when the cutter is matched to the comb pitch, if you are using a smaller cutter the diameter will be the wide end of the cutter plus the difference in size between the cutter guide and comb pitch.

Once set note down setting for future reference.

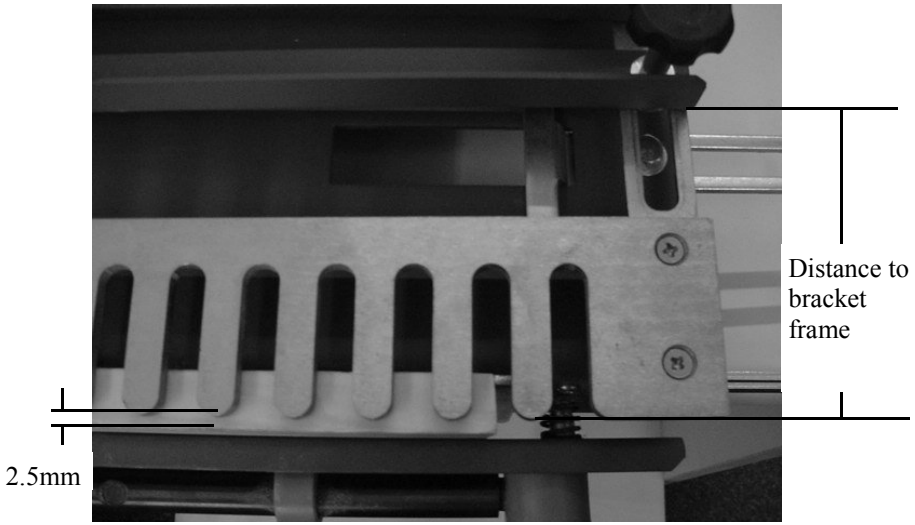

CLAMPING WORK PIECES

The work pieces must be clamped correctly before any cutting can take place.
Move both eccentric rods up to allow the rod fixers (part no 23) to move up and outwards, place the work pieces under the rod fixers and adjust spacing screws (part no 8) until the rod fixers move close to the work pieces, keep the rod fixers parallel with the work pieces and do not adjust rod fixers until they clamp down (clamping is via the eccentric rods being push down).
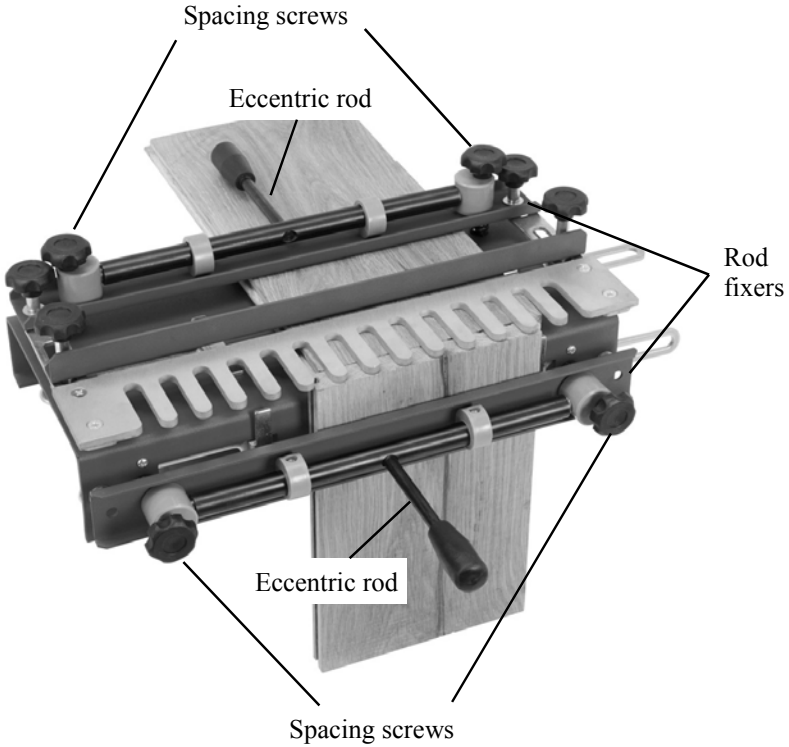
Once the rod fixers are set the work pieces can be placed in to the dovetail jig , the horizontal work piece first, this is passed under the top rod fixer and pushed against the stop, the work piece is then moved until the front edge is level with the front of the work table (part no 1) and then the eccentric rod is pulled down to clamp the work piece, the vertical work piece is then passed under the front rod fixer, it is pushed against the vertical stop and its end is level with the upper surface of the horizontal work piece, the eccentric rod is then pushed to clamp the work piece.